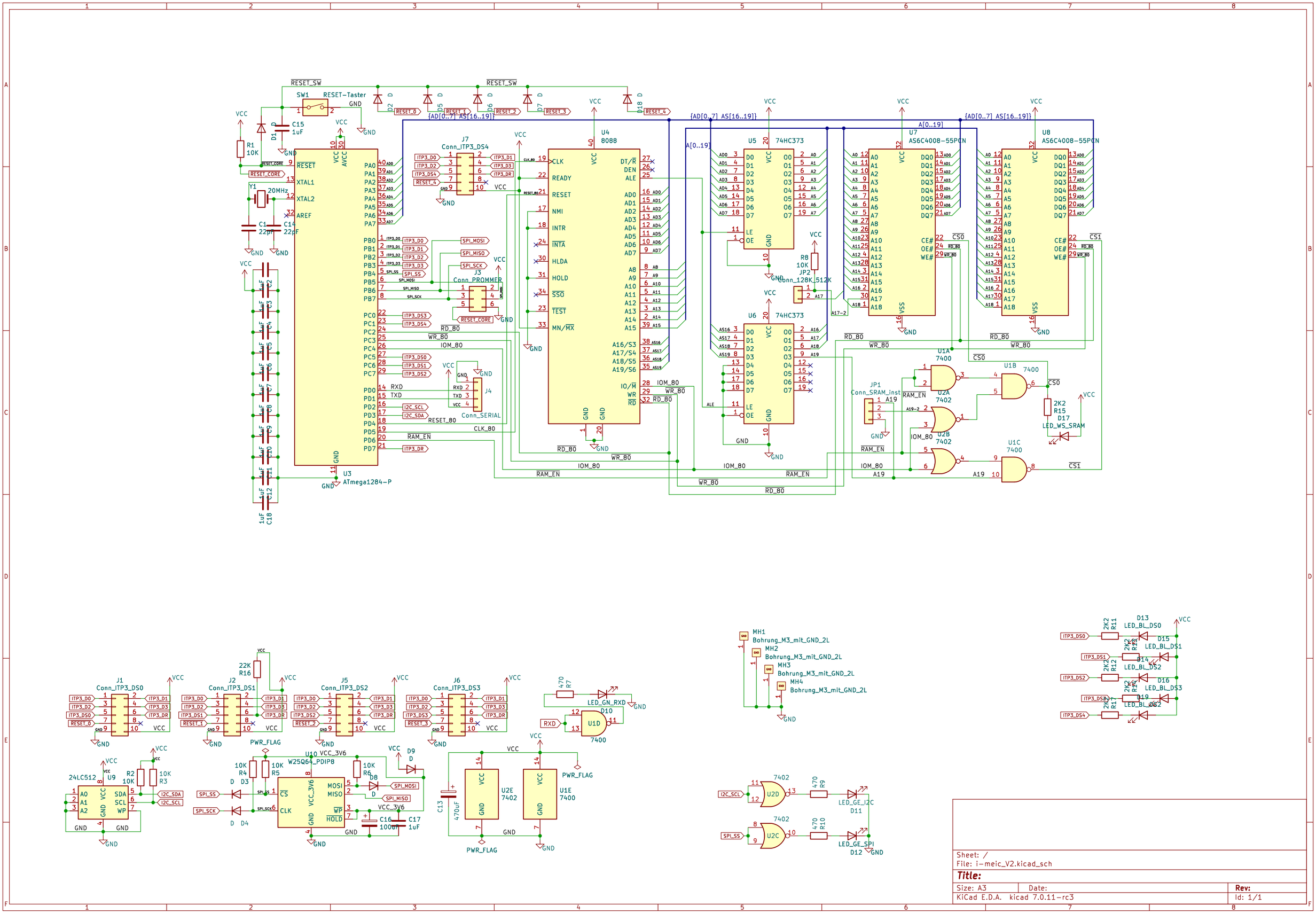

Sheet: /
File: i-meic_V2.kicad_sch

Title:

Size: A3	Date:	Rev:
KiCad E.D.A. kicad 7.0.11-rc3		Id: 1/1